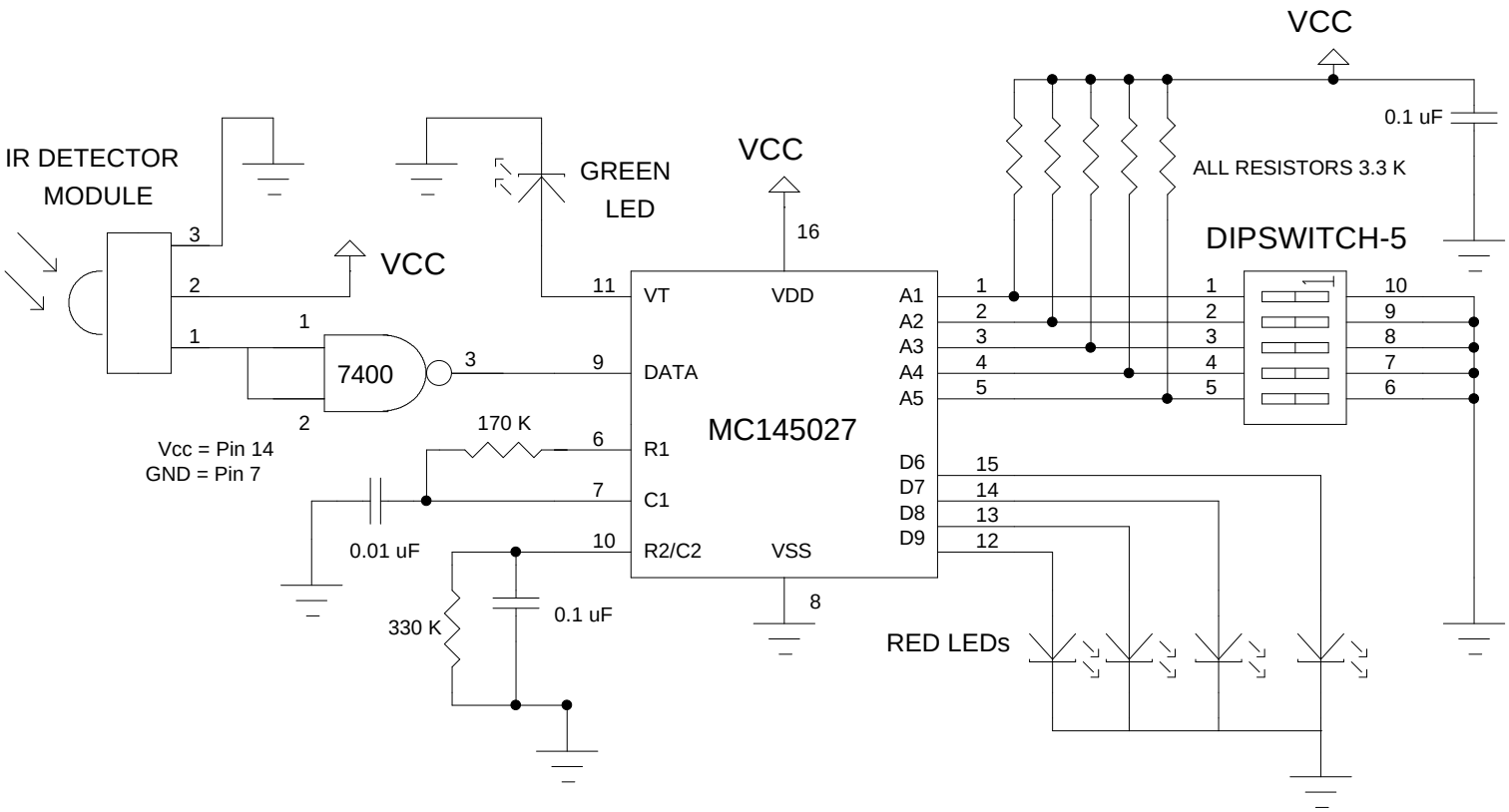
VCC
0.1 uF
ALL RESISTORS 3.3 K
DIPSWITCH-5
IR DETECTOR
MODULE
GREEN
LED
VCC
16
VCC
3
2
1
1
7400
3
2
11
VT
VDD
9
DATA
MC145027
170 K
6
R1
7
C1
10
R2/C2
VSS
8
A1
A2
A3
A4
A5
D6
D7
D8
D9
1
2
3
4
5
15
14
13
12
1
2
3
4
5
10
9
8
7
6
Vcc = Pin 14
GND = Pin 7
0.01 uF
330 K
0.1 uF
RED LEDs