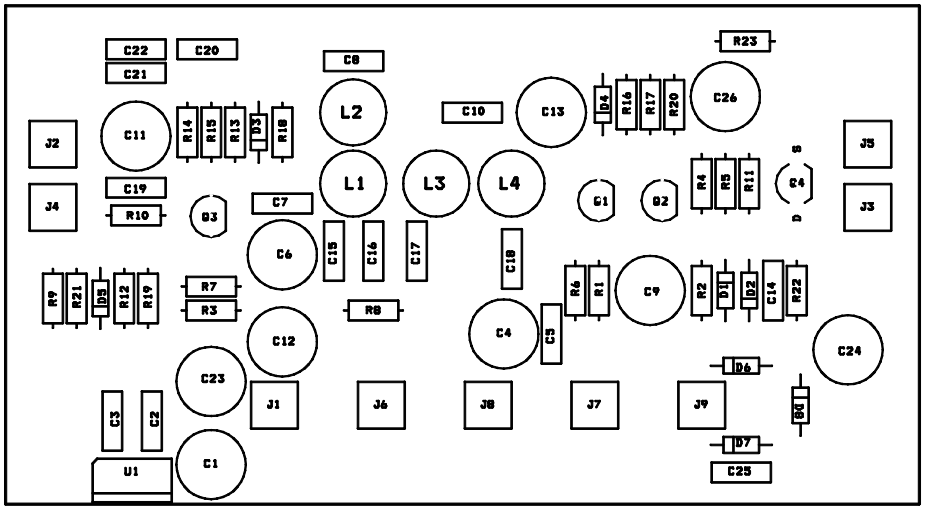
C22
C20
C21
C8
R23
L2
C10
C13
D4
R16
R17
R20
C26
J2
C11
R14
R15
R13
D3
R18
J5
L1
L3
L4
R4
R5
R11
Q4
J4
C19
R10
Q3
C7
Q1
Q2
J3
C6
C15
C16
C17
C18
R9
R21
D5
R12
R19
R7
R3
R8
R6
R1
C9
R2
D1
D2
C14
R22
C12
C4
C5
C24
D6
C23
J1
J6
J8
J7
J9
R24
C3
C2
D7
U1
C1
C25

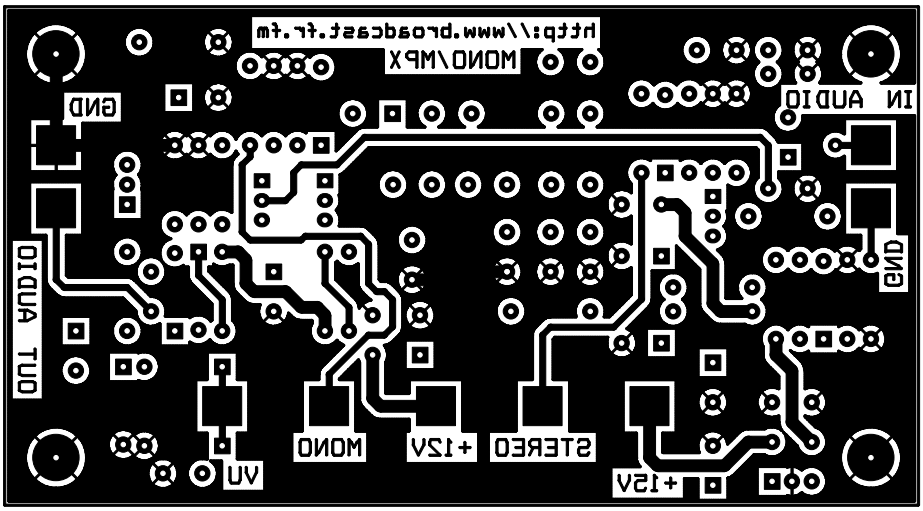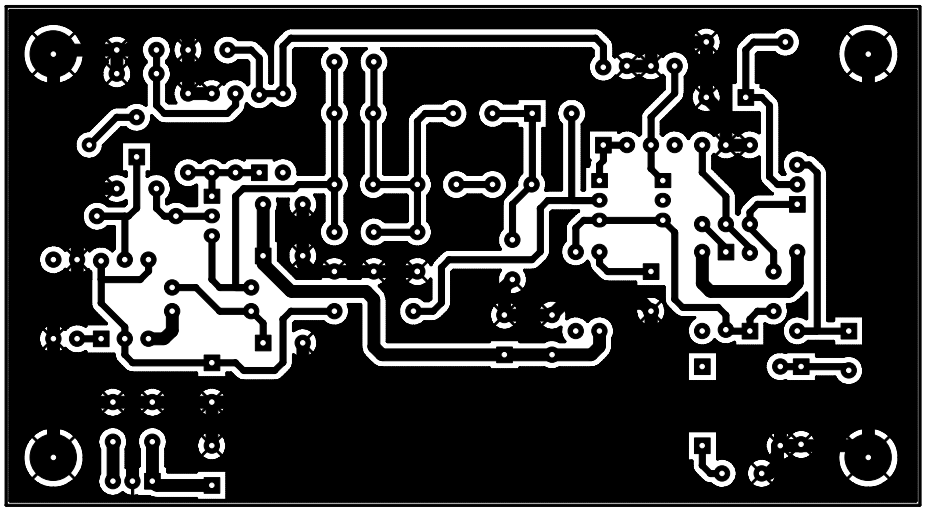
http:\\www.broadcast.fr.fm
MONO\MPX
GND
IN AUDIO
GND
OUT AUDIO
VU
MONO
+12V
STEREO
+15V